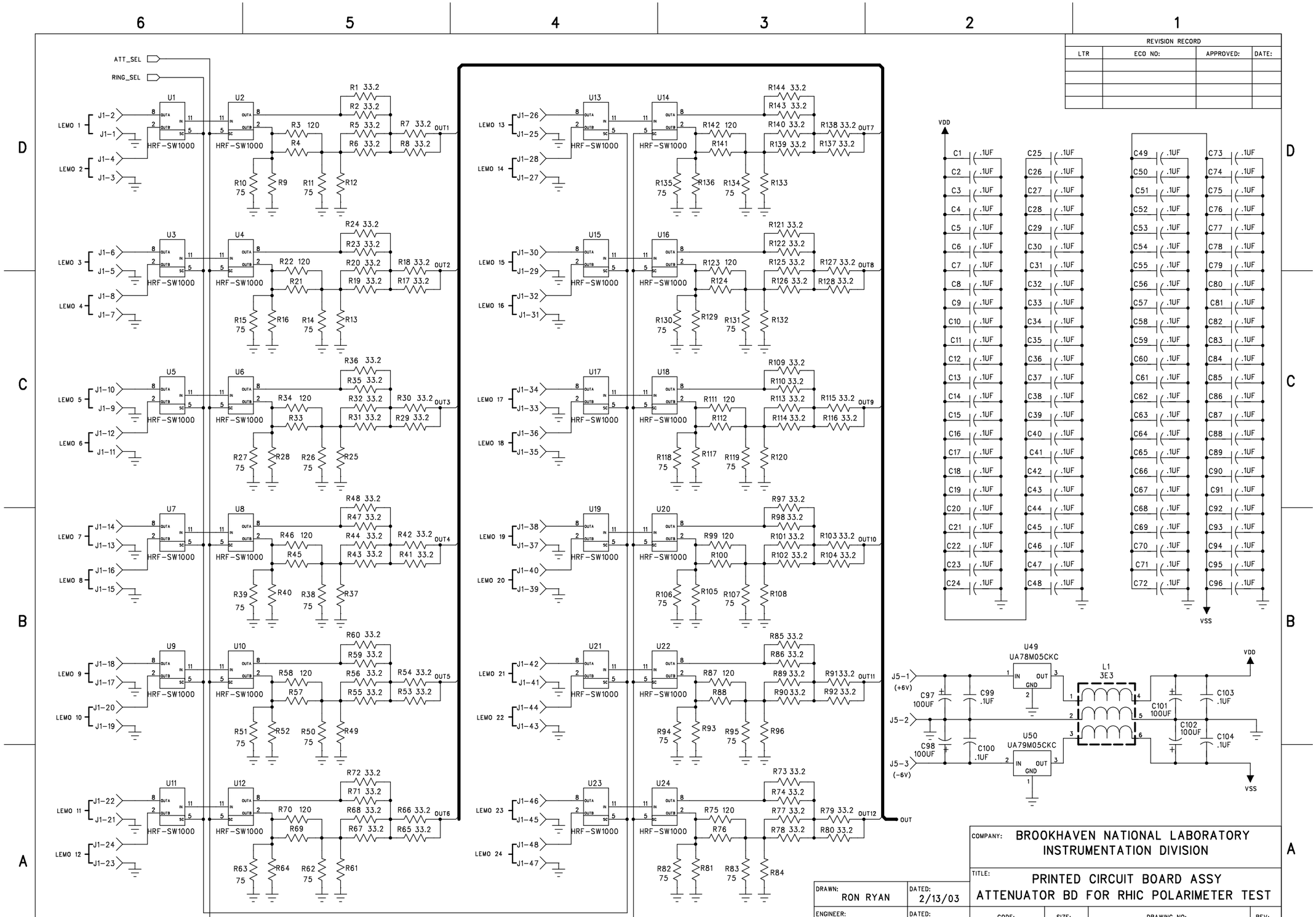

REVISION RECORD			
LTR	ECO NO:	APPROVED:	DATE:

NOTES: UNLESS OTHERWISED SPECIFIED.
1: ALL RESISTORS ARE 1/6 WATT, 1%.

DRAWN: RON RYAN	DATED: 2/13/03
ENGINEER: SERGIO RESCIA	DATED: 2/13/03

COMPANY: BROOKHAVEN NATIONAL LABORATORY
INSTRUMENTATION DIVISION

TITLE: PRINTED CIRCUIT BOARD ASSY
ATTENUATOR BD FOR RHIC POLARIMETER TEST

CODE:	SIZE:	DRAWING NO:	REV:
		I01146	

SCALE:

SHEET: 1 OF 2