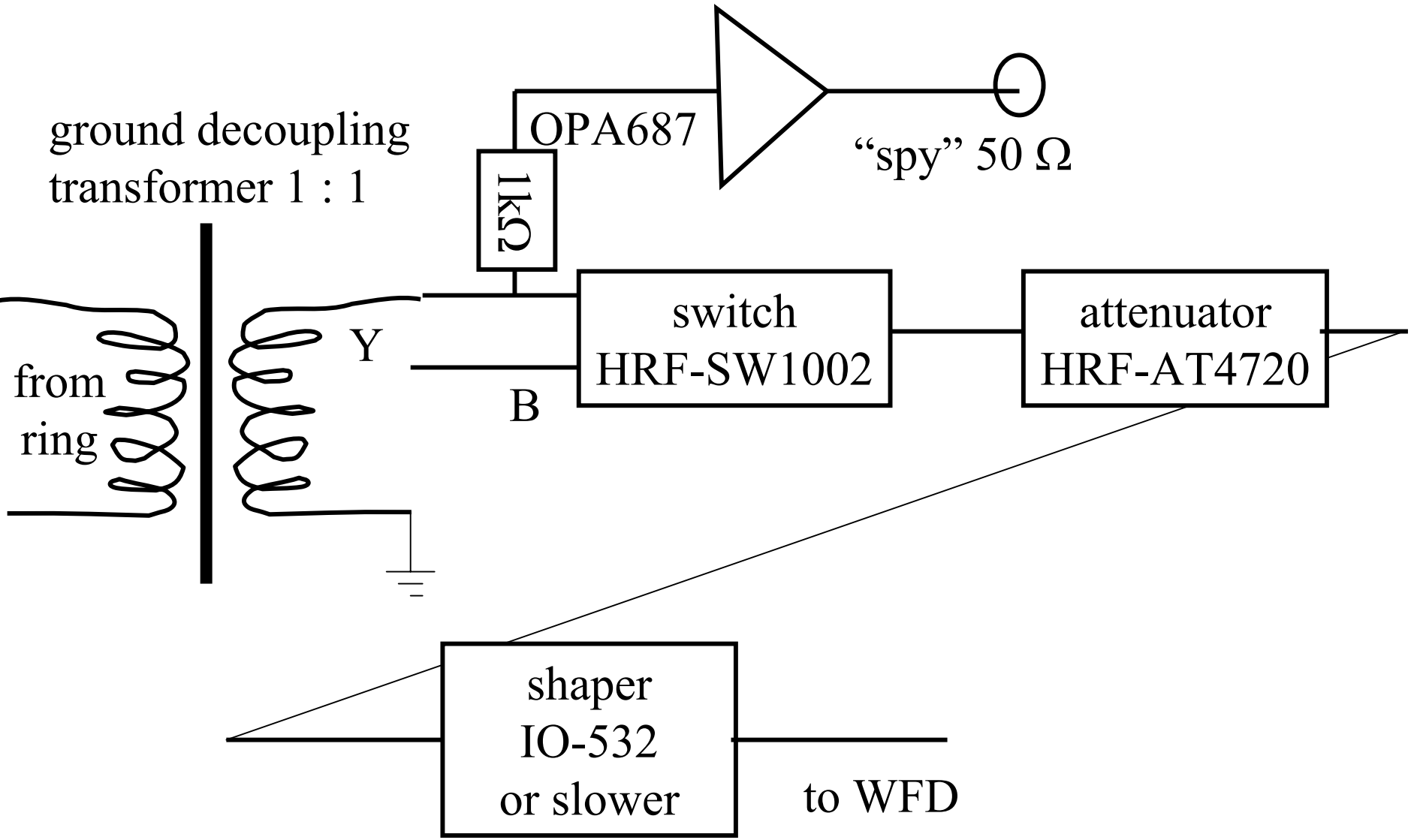Conceptual Design of Shaper Board for pC CNI polarimeters