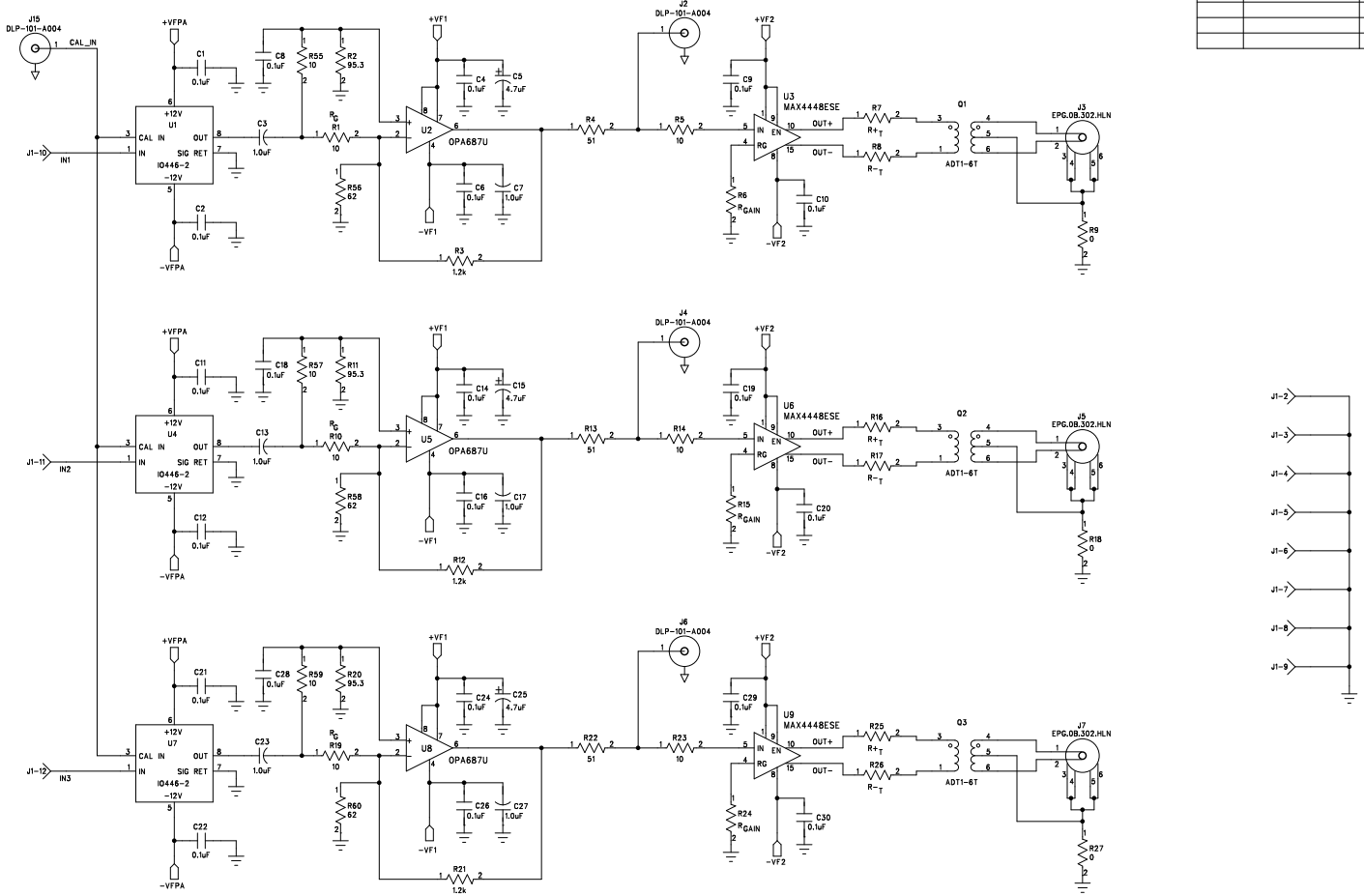

REVISION RECORD			
LTR	ECO NO:	APPROVED:	DATE:

DRAWN: KEVIN WOLNIEWICZ	DATED: 05/30/00	COMPANY: BROOKHAVEN NATIONAL LABORATORY INSTRUMENTATION DIVISION UPTON, NEW YORK	
CHECKED:	DATED:	TITLE: RHIC POLARIMETER FRONT-END ELECTRONICS	
QUALITY CONTROL:	DATED:	CODE: T-2000-88	SIZE: C
RELEASED:	DATED:	DRAWING NO: IO-989-1	REV: A
		SCALE: 1 : 1	SHEET: 1 OF 3

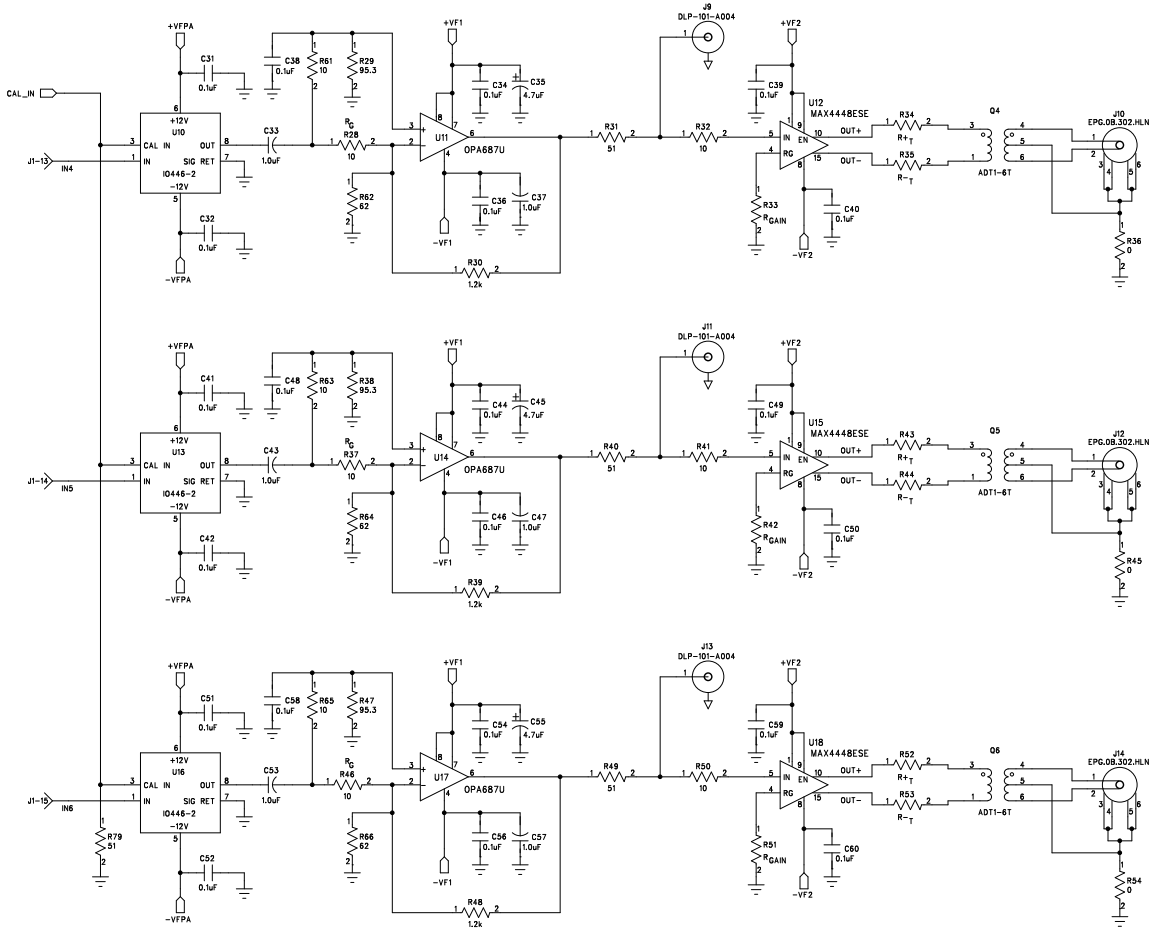

REVISION RECORD			
LTR	ECO NO:	APPROVED:	DATE:

COMPANY:	BROOKHAVEN NATIONAL LABORATORY INSTRUMENTATION DIVISION UPTON, NEW YORK
TITLE:	RHIC POLARIMETER FRONT-END ELECTRONICS

DRAWN:	DATED:
KEVIN WOLNIEWICZ	05/30/00
CHECKED:	DATED:
QUALITY CONTROL:	DATED:
RELEASED:	DATED:

CODE:	SIZE:	DRAWING NO:	REV:
T-2000-88	C	IO-989-1	A

SCALE: 1 : 1 SHEET: 2 OF 3

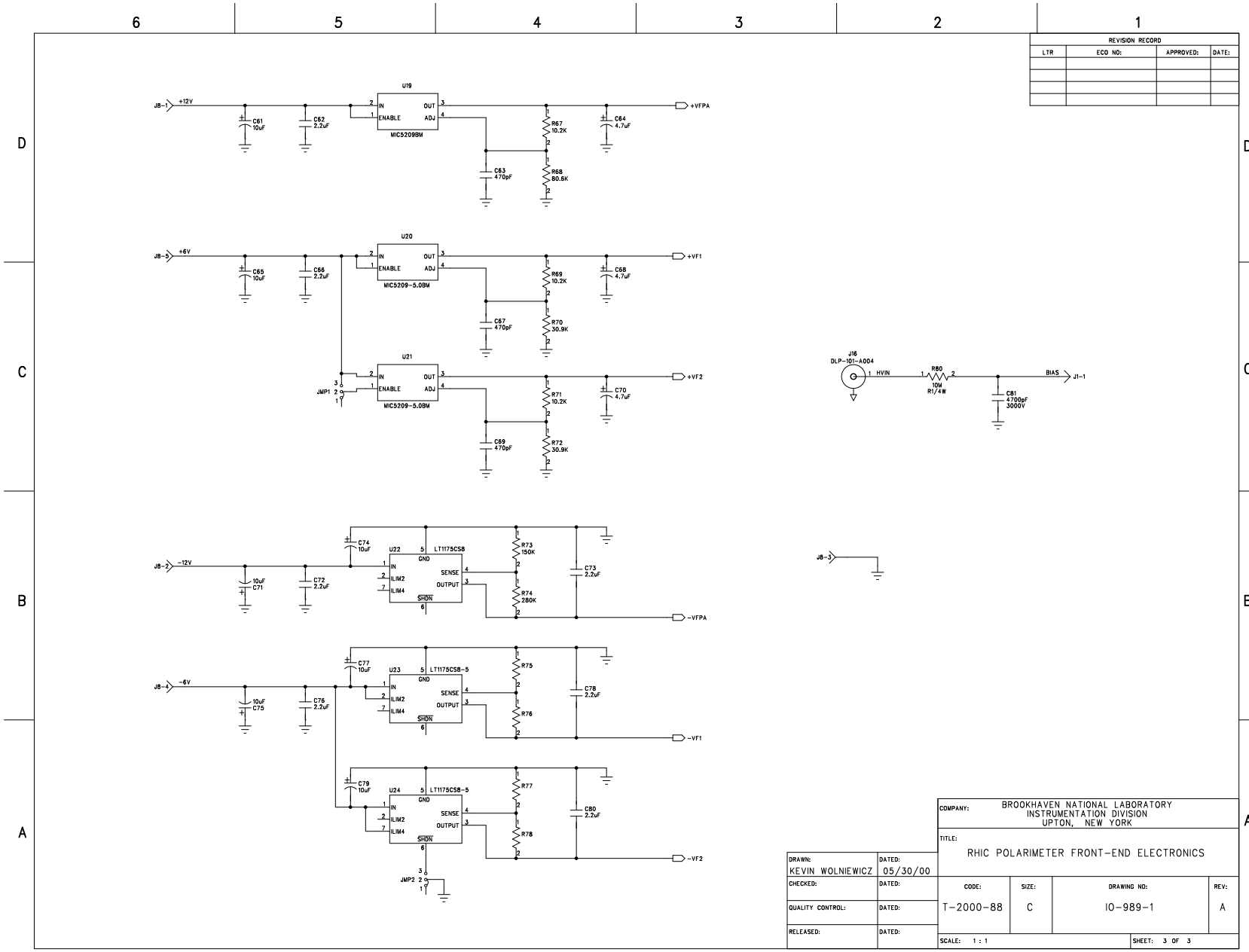

REVISION RECORD			
LTR	ECO NO:	APPROVED:	DATE:

COMPANY: BROOKHAVEN NATIONAL LABORATORY INSTRUMENTATION DIVISION UPTON, NEW YORK			
TITLE: RHIC POLARIMETER FRONT-END ELECTRONICS			
CODE: T-2000-88	SIZE: C	DRAWING NO: 10-989-1	REV: A
SCALE: 1 : 1		SHEET: 3 OF 3	

DRAWN: KEVIN WOLNIEWICZ	DATED: 05/30/00
CHECKED:	DATED:
QUALITY CONTROL:	DATED:
RELEASED:	DATED: